V-band Self-Healing Power Amplifier with Adaptive Feedback Bias Control in 65 nm CMOS

Jenny Yi-Chun Liu

November 14, 2011

Outline

- Motivation for 60 GHz Applications
- Introduction of a Self-Healing Transmitter
- V-Band Power Amplifier Design
- Measurement Results
- Conclusion

Why 60 GHz?

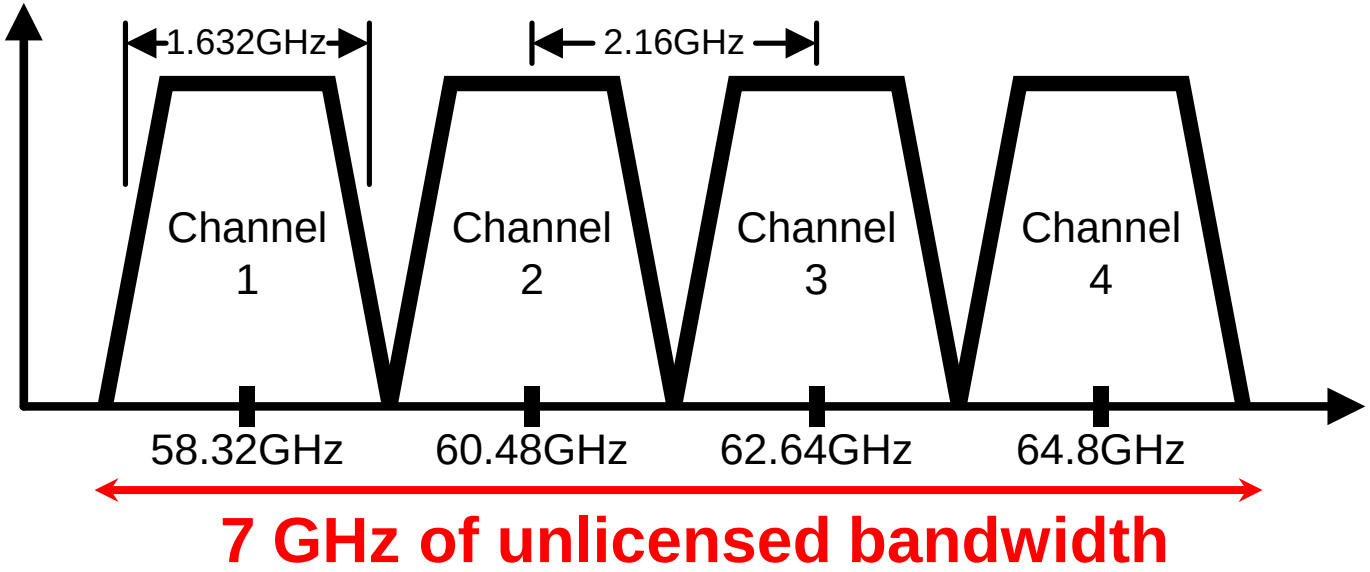

- Unlicensed 60 GHz ISM band
- Standards: IEEE 802.11ad, WiGig, WirelessHD
- 1.6 GHz channel bandwidth
  - High data rate (> 4 Gb/s)

* IEEE 802.15.3c

Oxygen Absorption

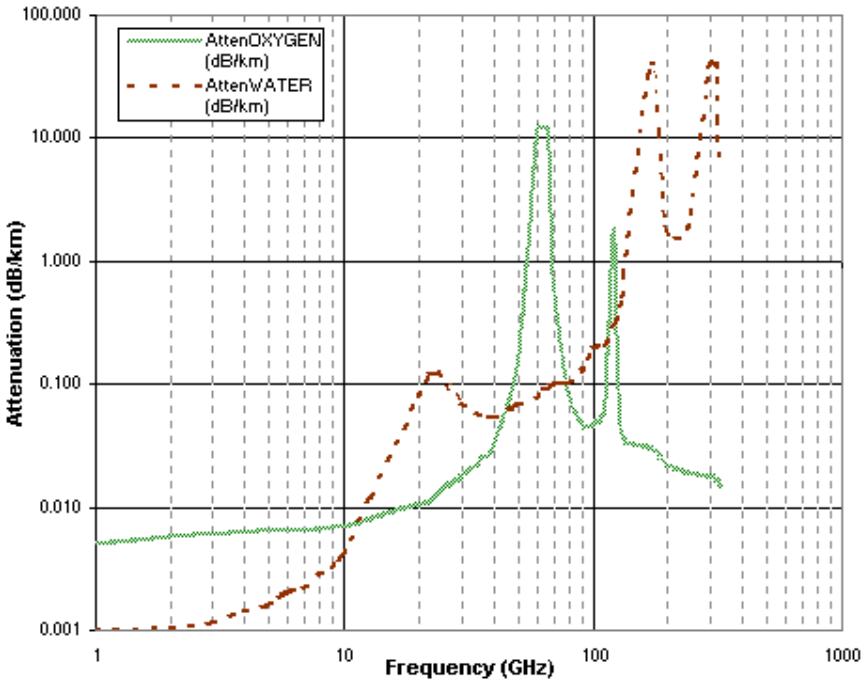

- High attenuation in the air
  - Path loss 68 dB/m
  - Short distance transmission (10 m)
  - Frequency re-usability
  - High security

* RF Cafe: http://rfcafe.com

60 GHz Applications

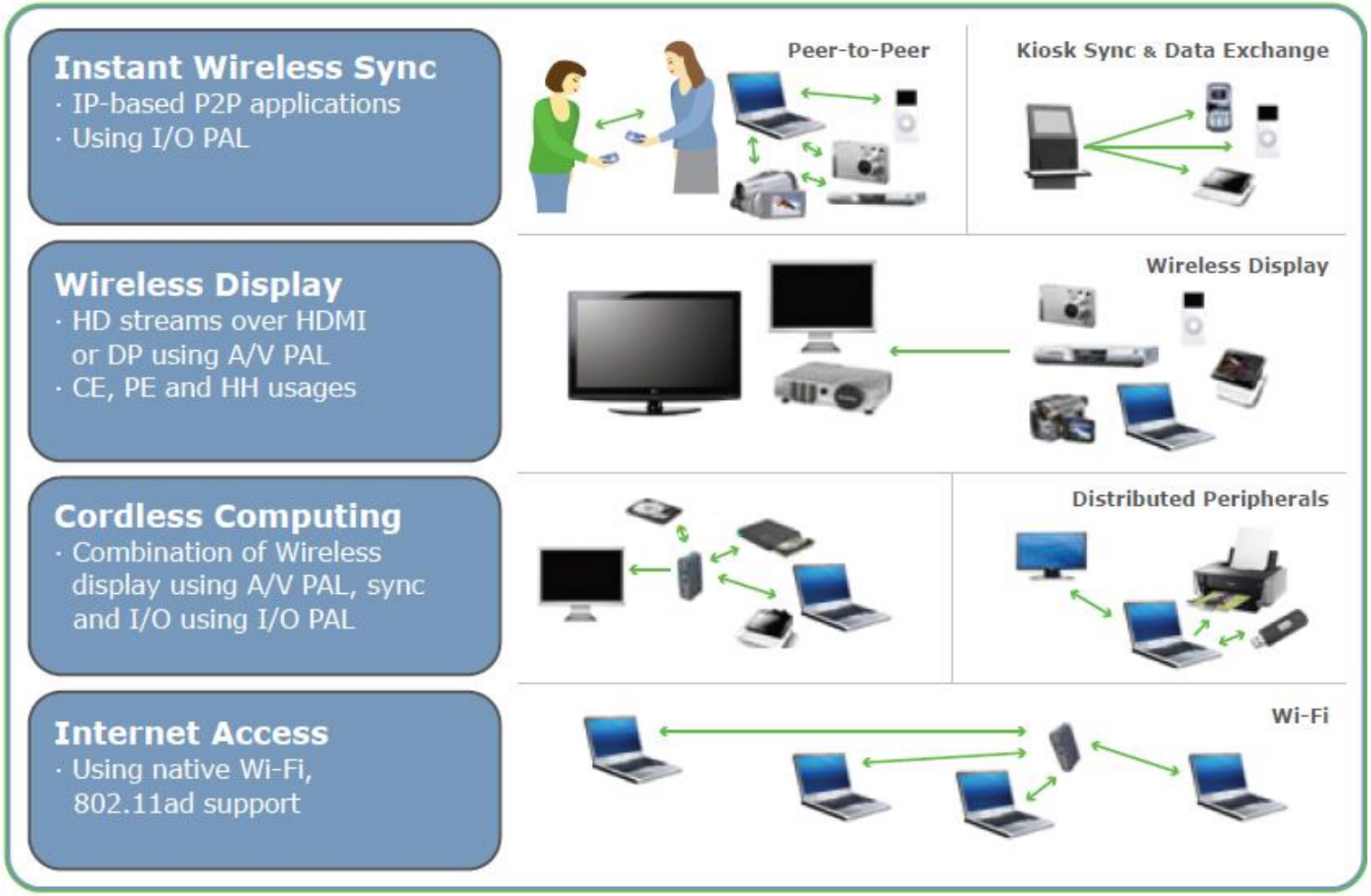

* WiGig: http://wirelessgigabitalliance.org/

CMOS Technology Scaling

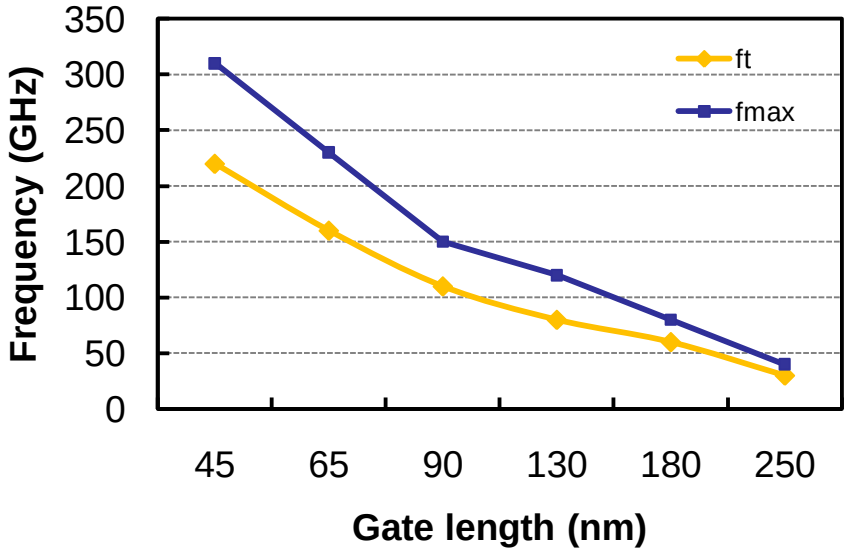

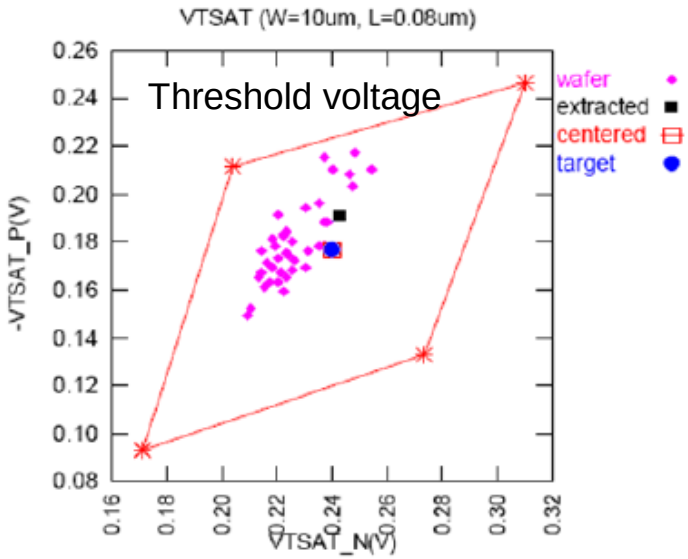

- Available gain increases with technology scaling
- Process variation more serious in deep-scaled regime
- Device characteristics vary with process corners
  - 55% V_{th} variation
  - 20% capacitance (fringe, junction, overlap) variation
- Low performance yield
  - Self-healing to overcome process and environmental variations

Self-Healing Transmitter

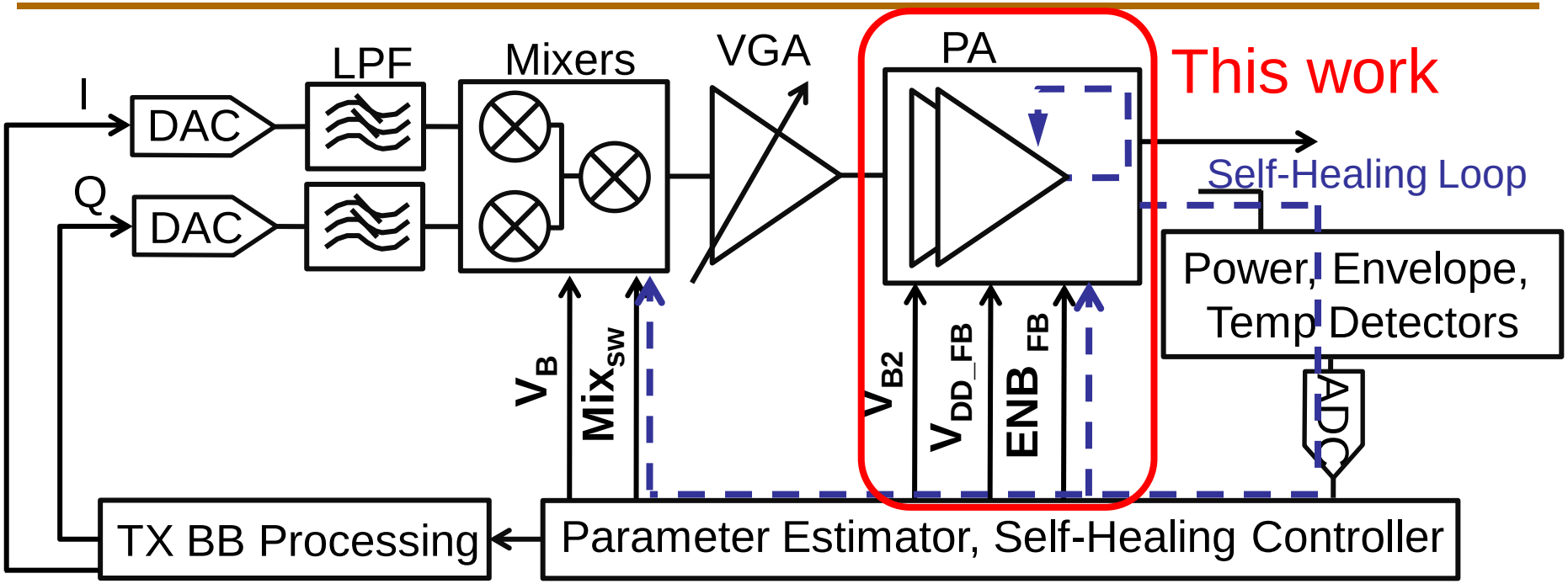

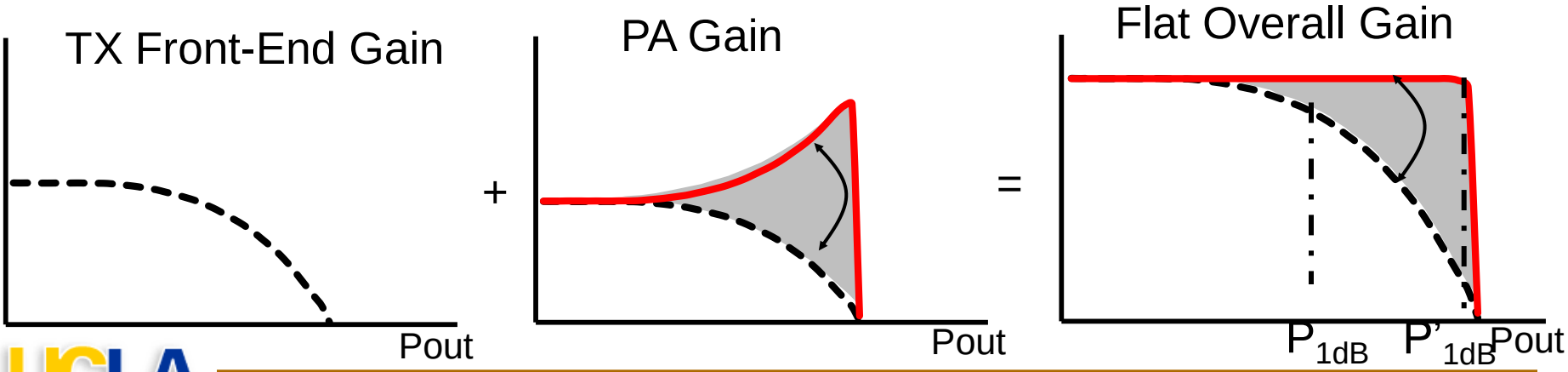

Self-Healing Flow

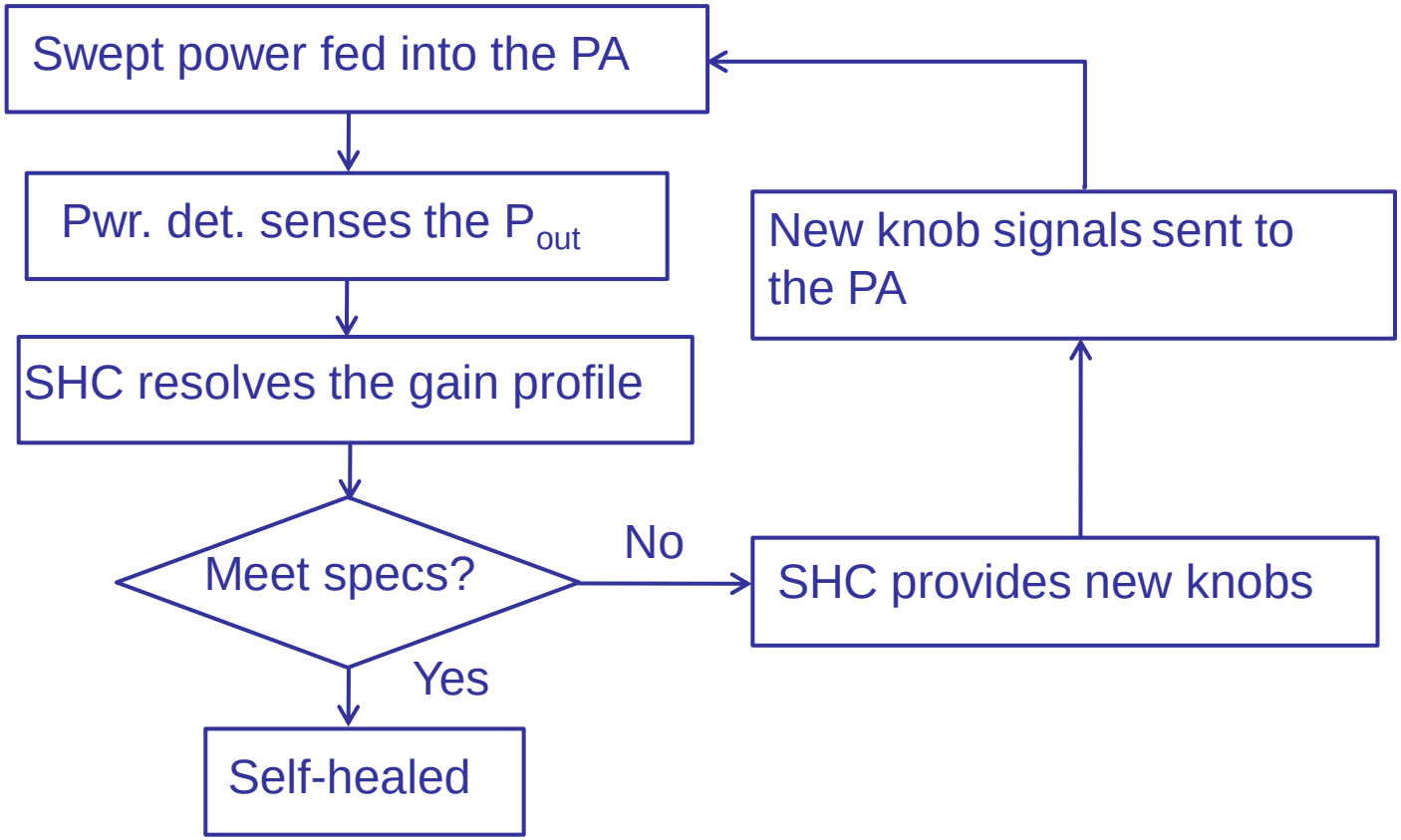

Active Device Modeling

Parasitic Extraction

Layout

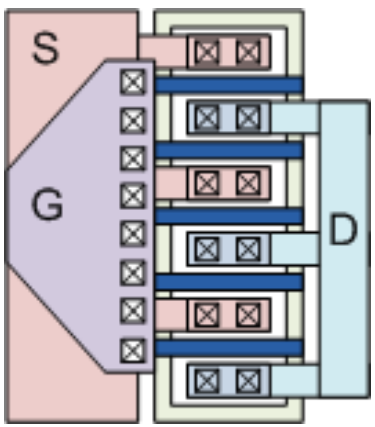

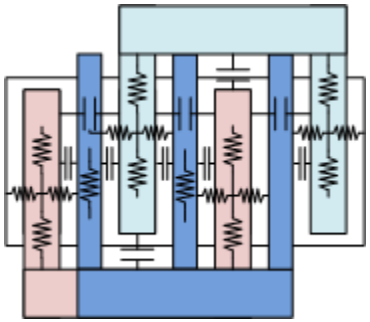

Calibre

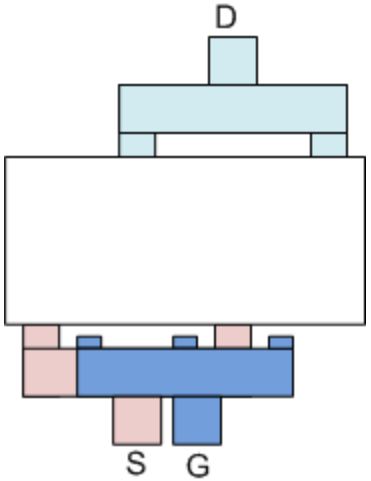

EM tools (Momentum, HFSS)

Modified model

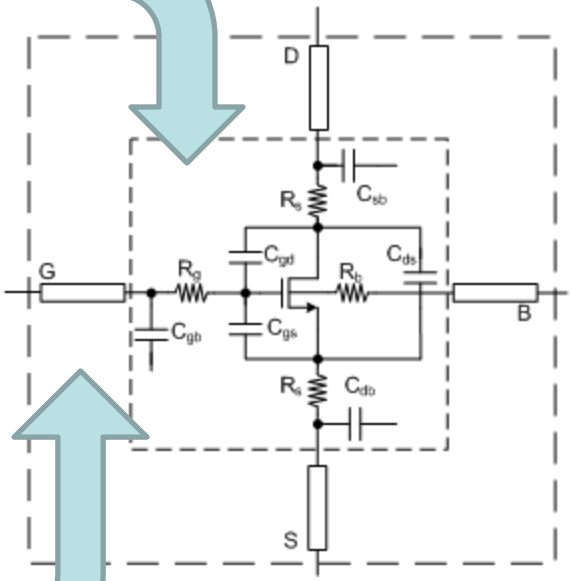

Passive Device Design and Modeling

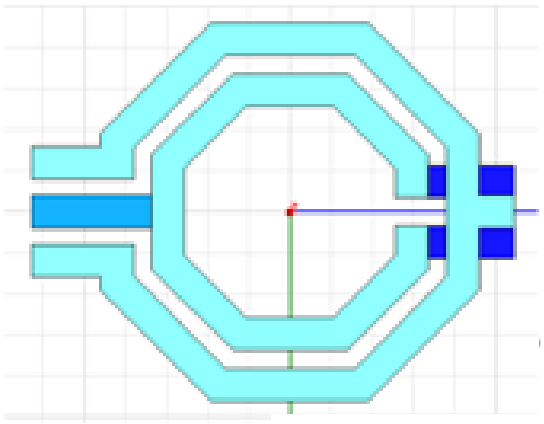

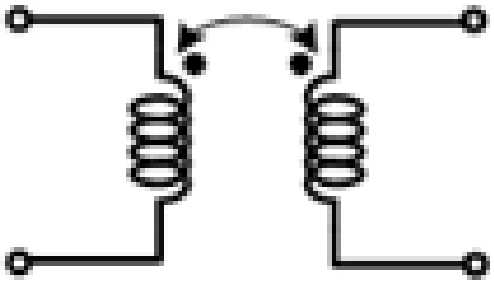

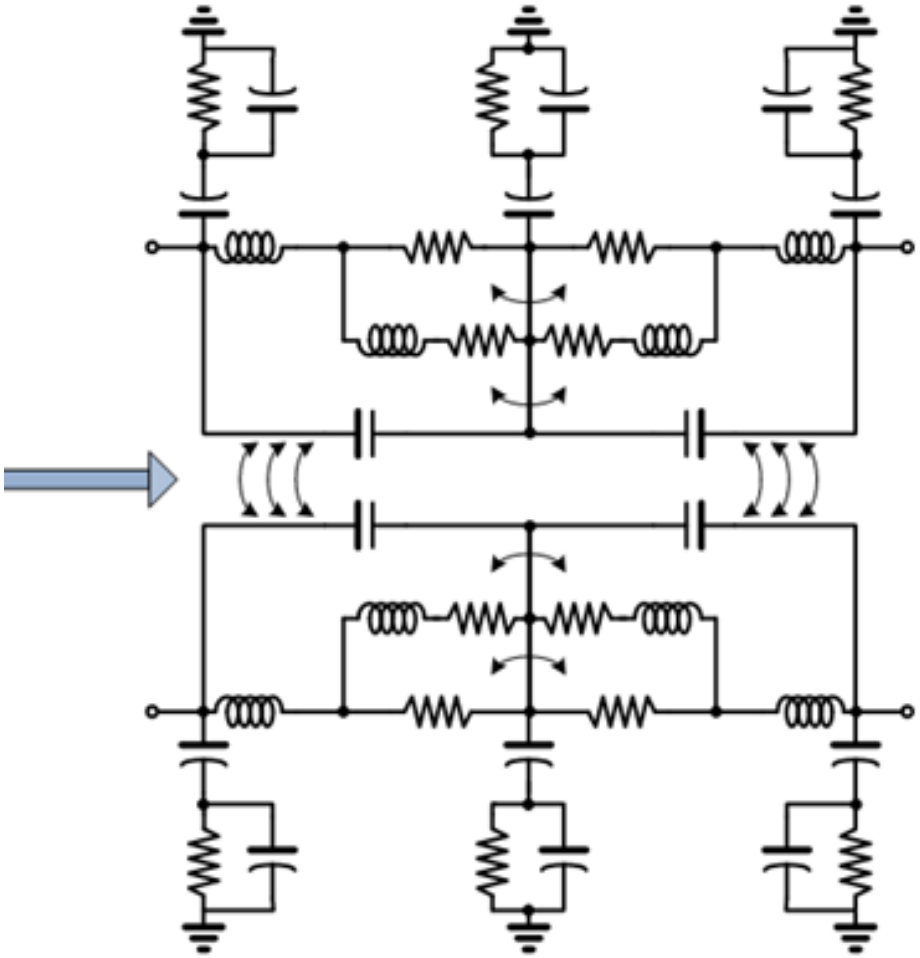

Circuit Schematic

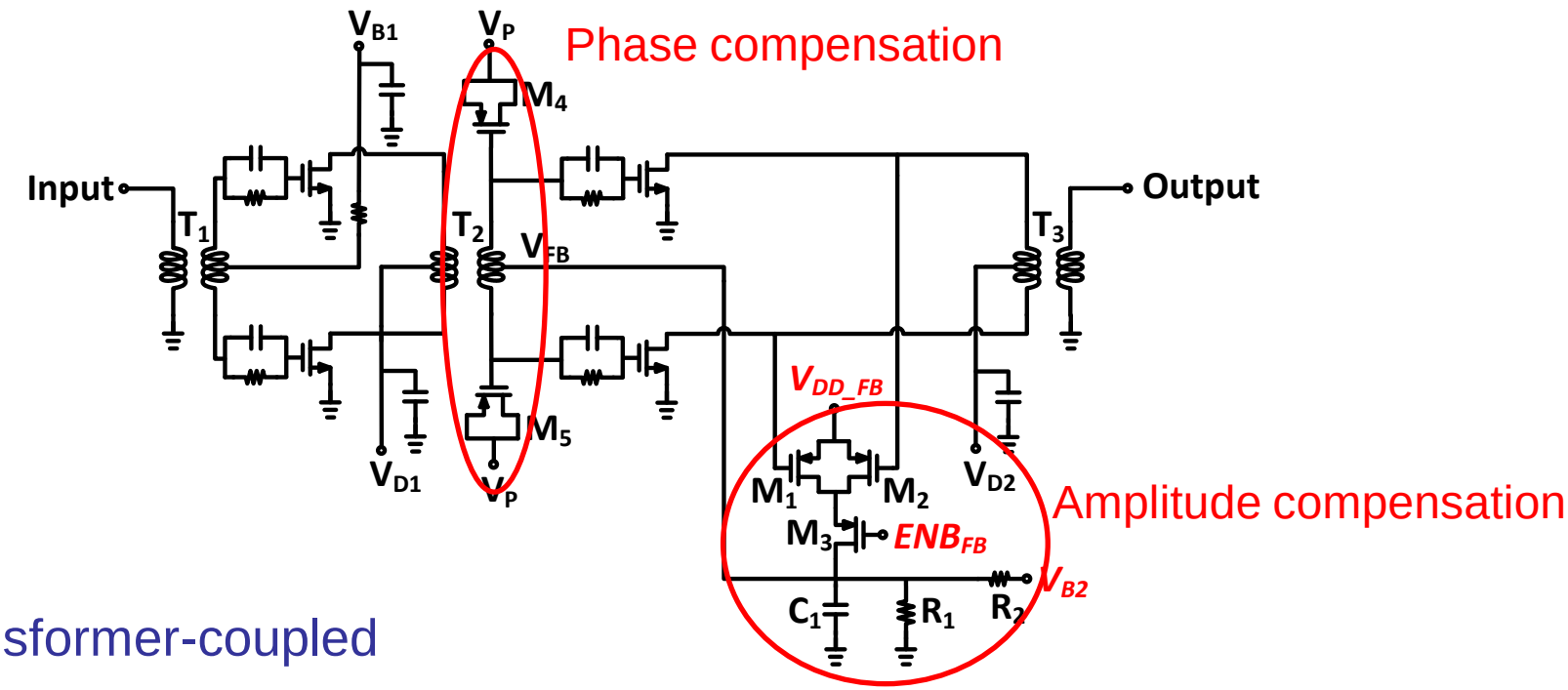

- Transformer-coupled
  - compact impedance matching, DC biasing, balun
- Differential design
- Class-AB operation
- 3 control knobs in local amplitude compensation
- Capacitive phase compensation

Amplitude Compensation Scheme

- Control knobs: V_{B2}, ENB_{FB}, V_{DD_FB}
- Low DC power dissipation (1% overhead)
- Small area overhead (0.5%)

$$Bandwidth = \frac{1}{R_{FB} * C_{FB}} = 2GHz$$

$$R_{FB} = R_1 // R_2 \sim 60\Omega$$

$$C_{FB} = C_1 // C_{pa2,in} \sim 1pF$$

$$V_{FB} = \frac{R_1}{R_1 + R_2} V_{B2} + i_{FB} * Z_{FB}$$

$$i_{FB} \propto \left(\frac{w}{l}\right)_{1,2}, v_{out}^2$$

$$Z_{FB} = \frac{1}{j\omega C_{FB}} // R_1 // R_2$$

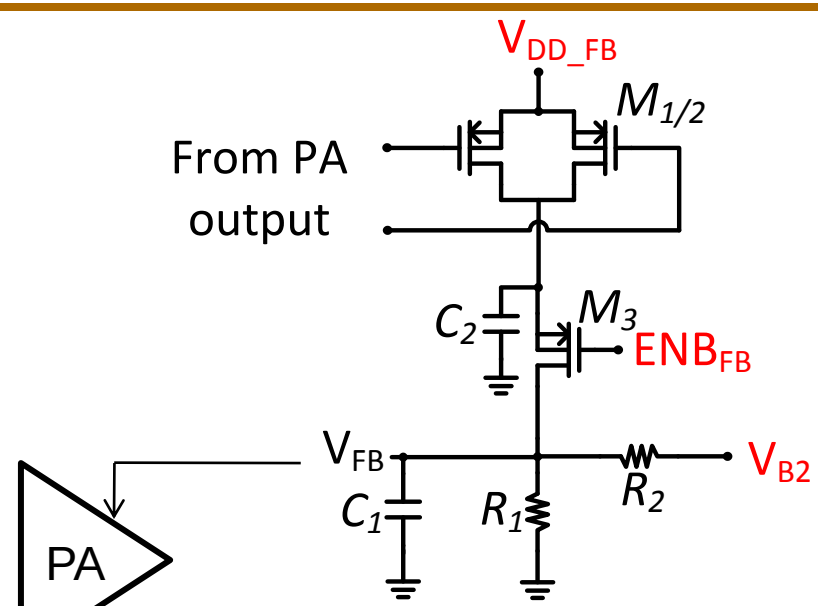

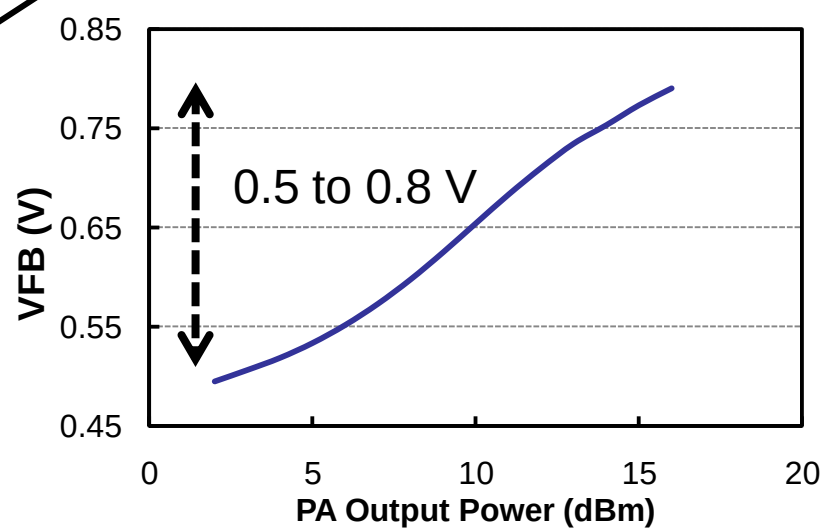

Effects of Control Knobs

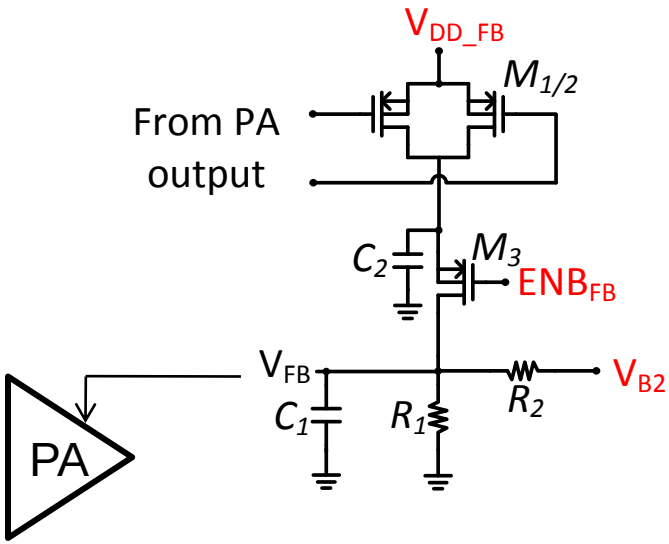

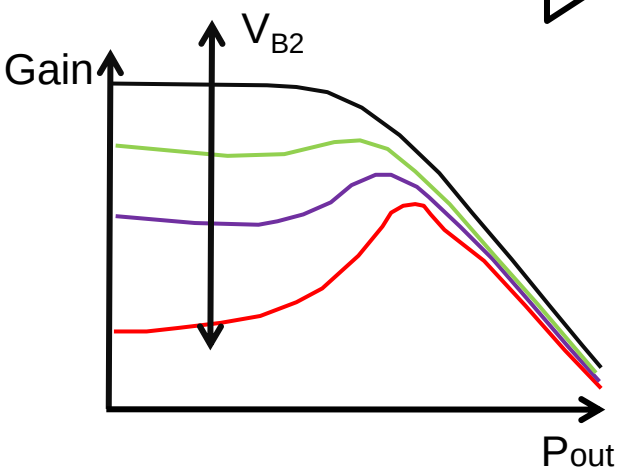

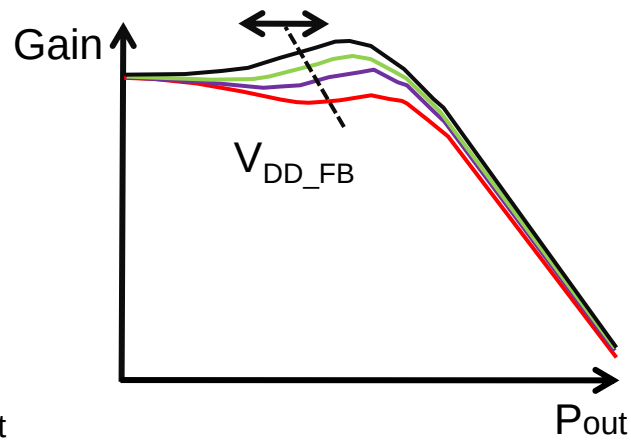

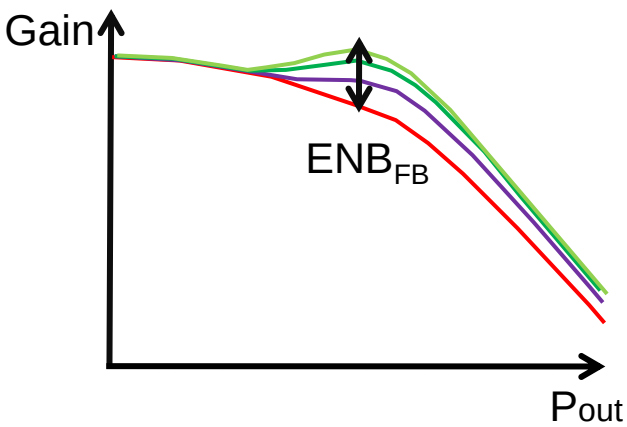

- V_{B2} changes the small signal gain
- V_{DD_FB} changes the power where the feedback loop turns on
- ENB_{FB} changes the feedback factor

Phase Compensation

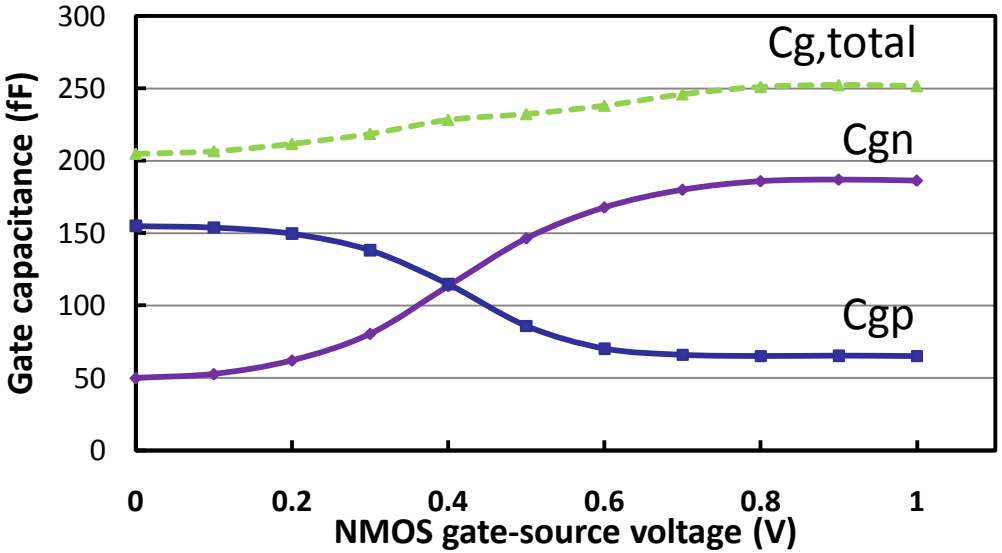

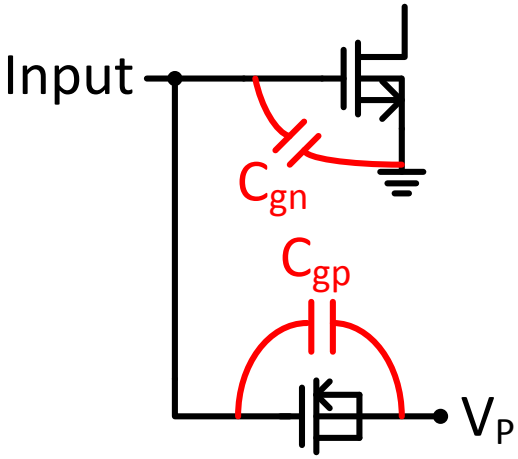

- AM-PM: signal-dependent transistor parameters
- C_{gn} varies by 110 fF from 0.2 V to 0.6 V
- PMOS : proper size and bias
- Overall C_{gn} + C_{gp} variation is 20 fF
- V_P: control knob

PA Test-Chip Measurement

- 65 nm CMOS
- area: 0.36 mm^2

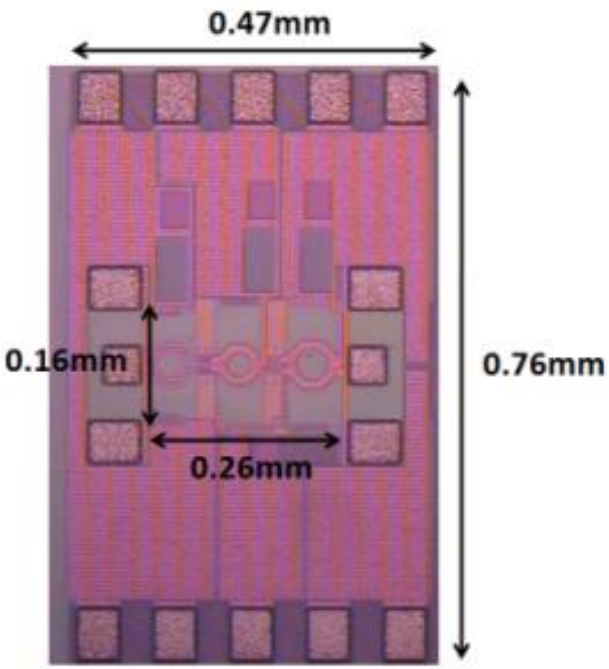

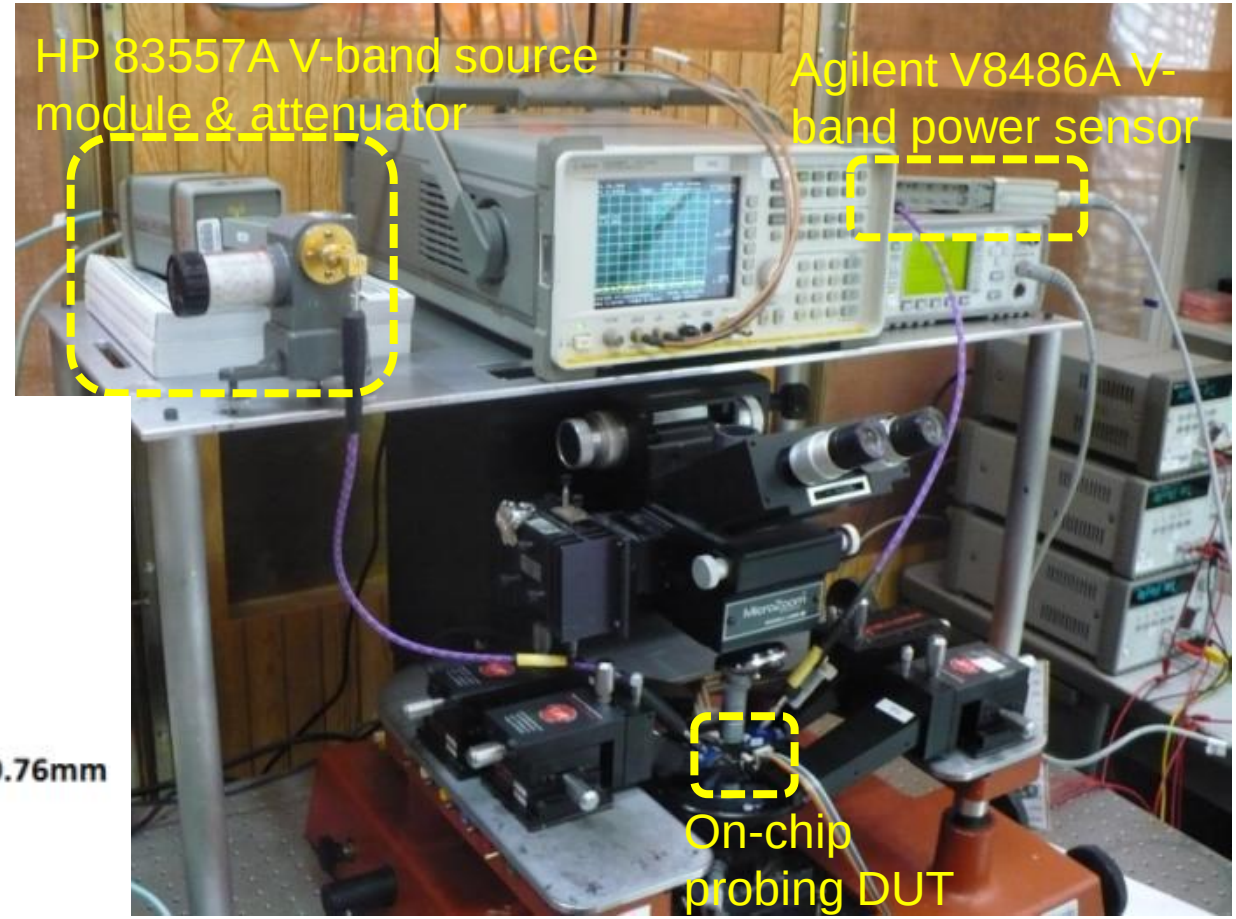

PA Gain Profile Measurement

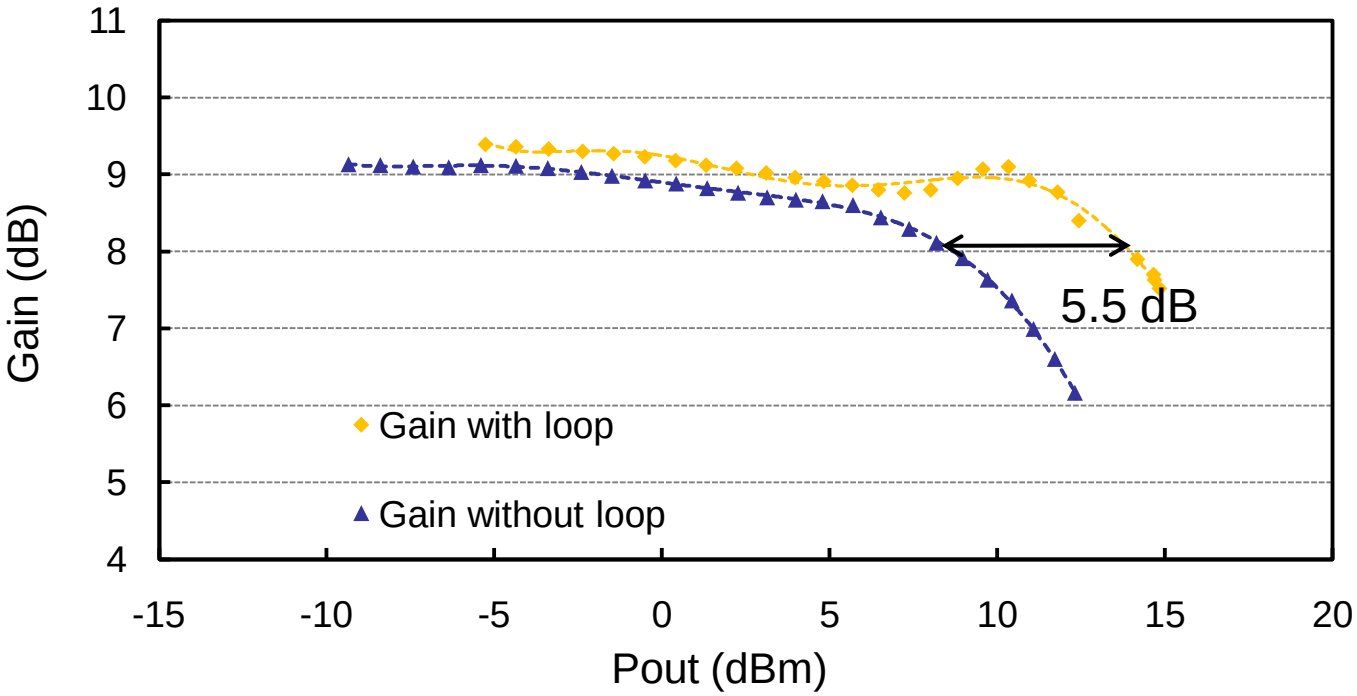

- Gain: 9 dB
- P_{1dB} is extended by 5.5 dB with the feedback loop
- 0.6 dB gain expansion

PA Large-Signal Measurements

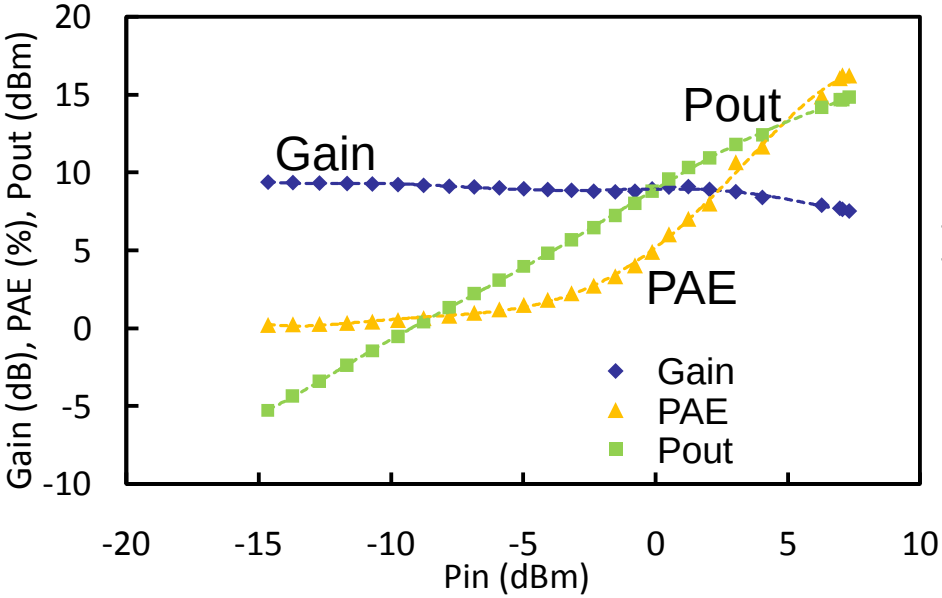

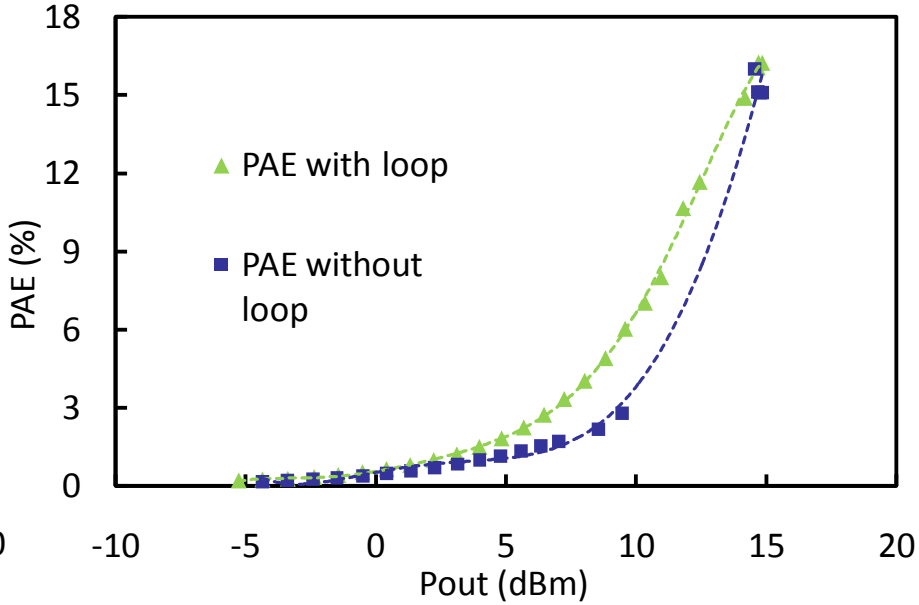

- P_{sat}: 14.85 dBm
- P_{1dB}: 13.7 dBm
- Peak PAE: 16%

- Back-off PAE improves by 1~3%

PA SP and Phase Measurements

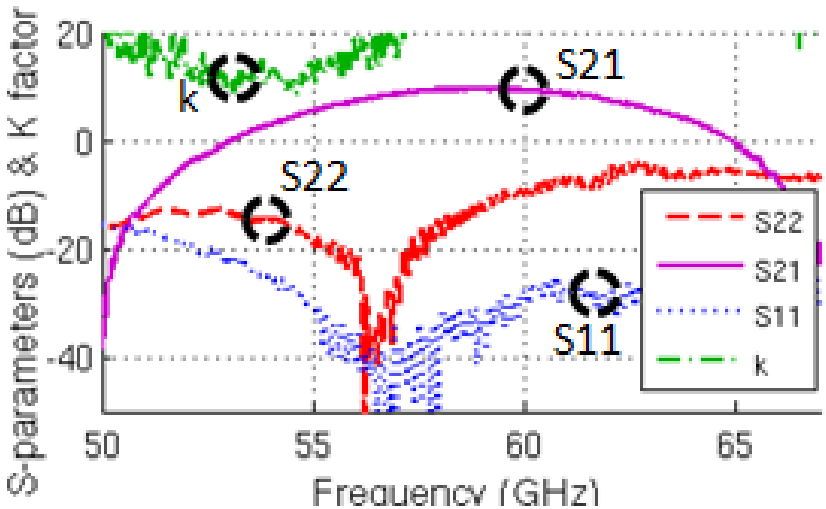

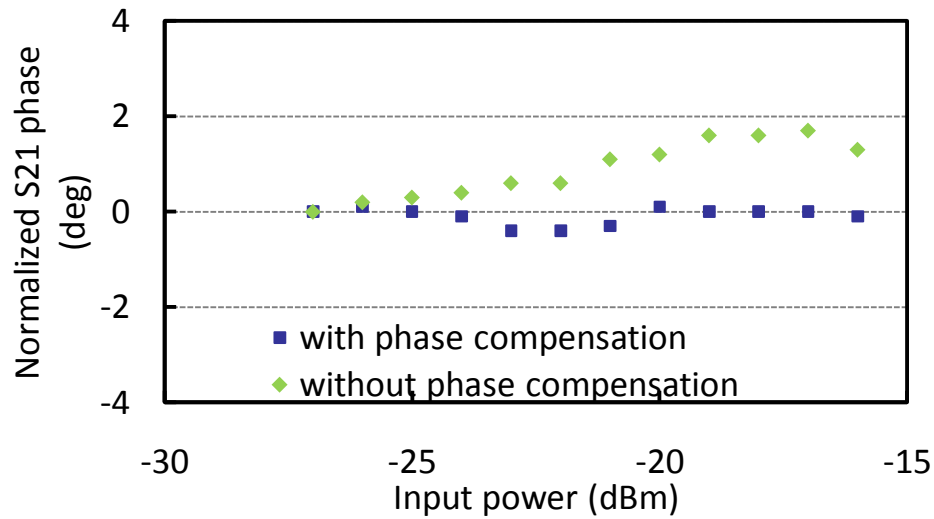

- S21: 10 dB @ 60 GHz
- 3-dB bandwidth: 7 GHz (55.5 GHz to 62.5 GHz)
- Both input/output match around 57 GHz

- AM-PM improves from 1.7° to 0.4°

PA Power and IP3 Measurements

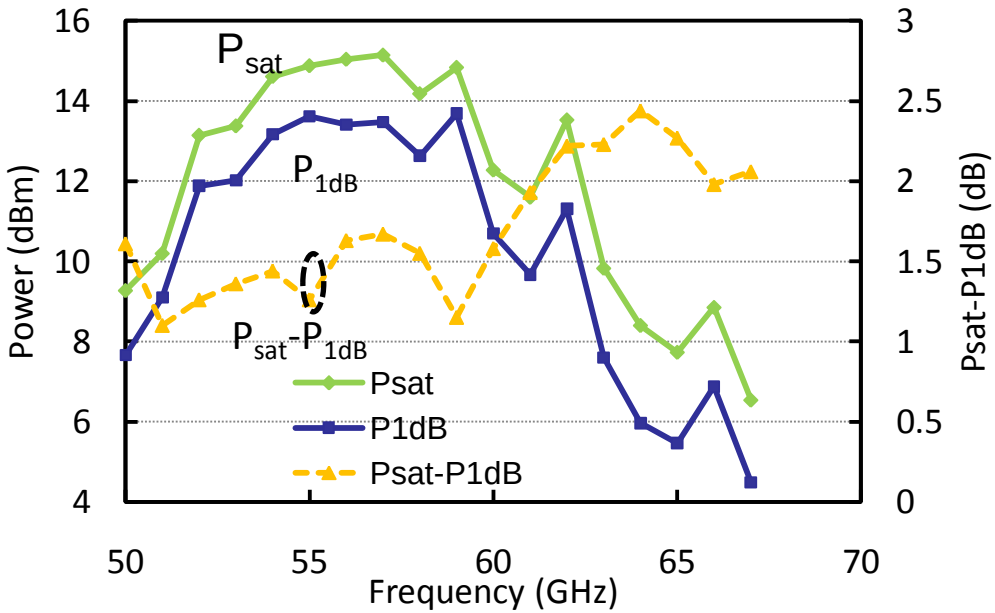

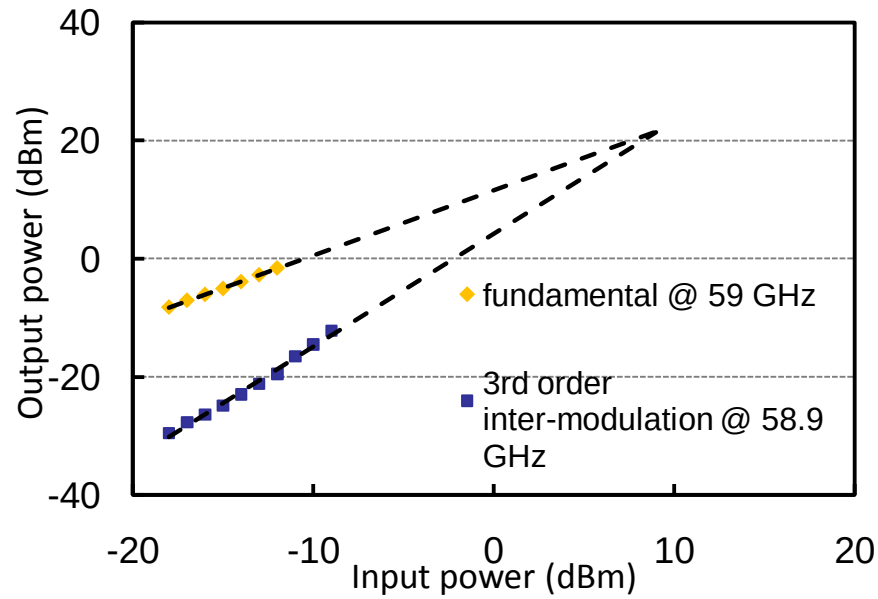

- P_{sat} > 10 dBm from 52 GHz to 63 GHz
- P_{1dB} > 9.7 dBm from 52 GHz to 62 GHz
- $P_{sat} – P_{1dB}$ always below 2.5 dB

- Two input tones: 59 GHz, 59.1 GHz
- OIP3: 20.4 dBm

PA Knob Tuning Measurements

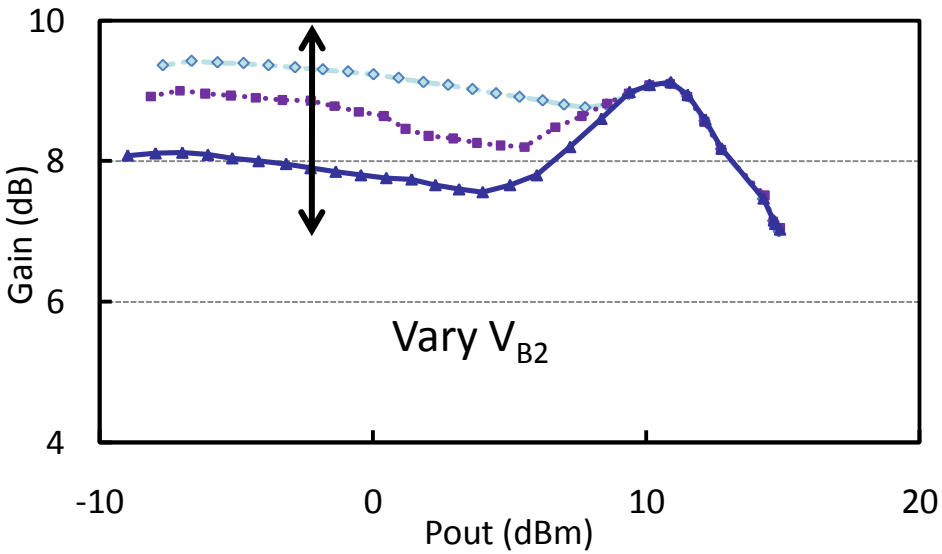

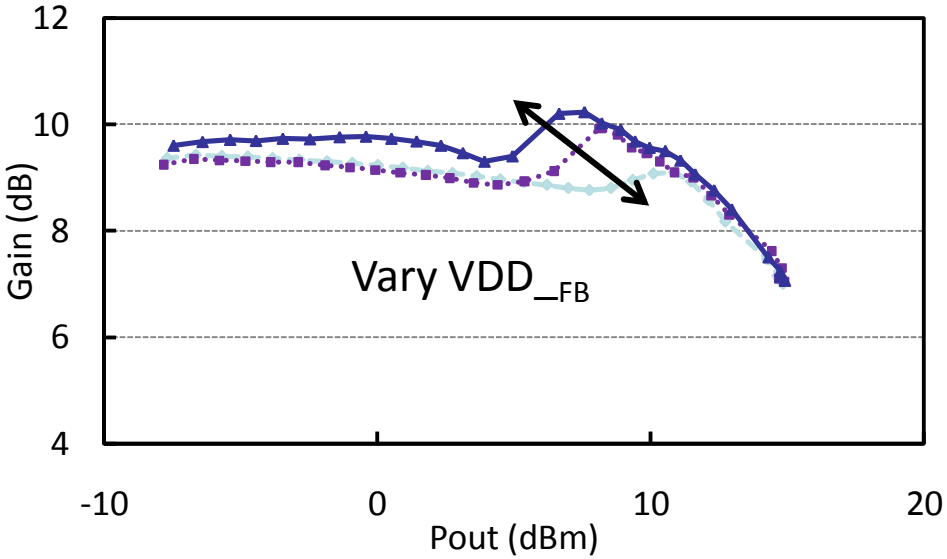

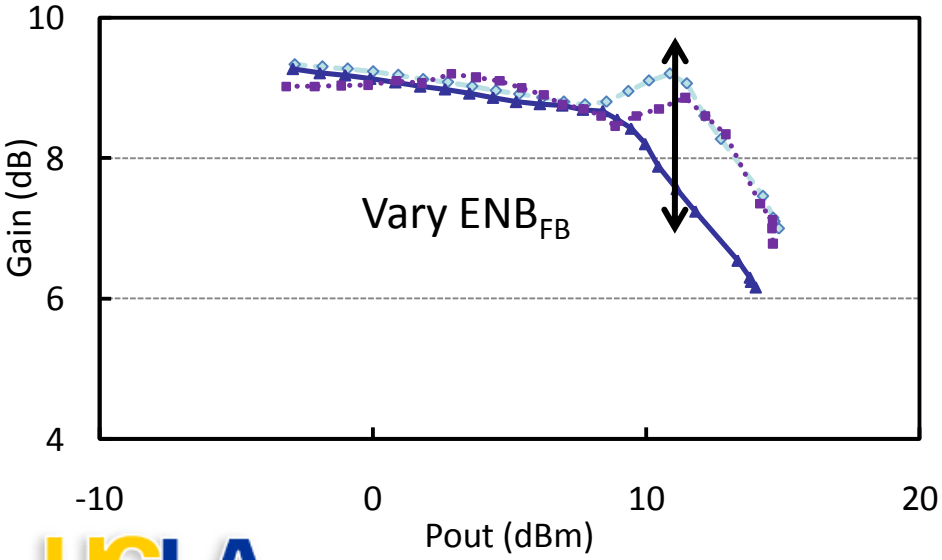

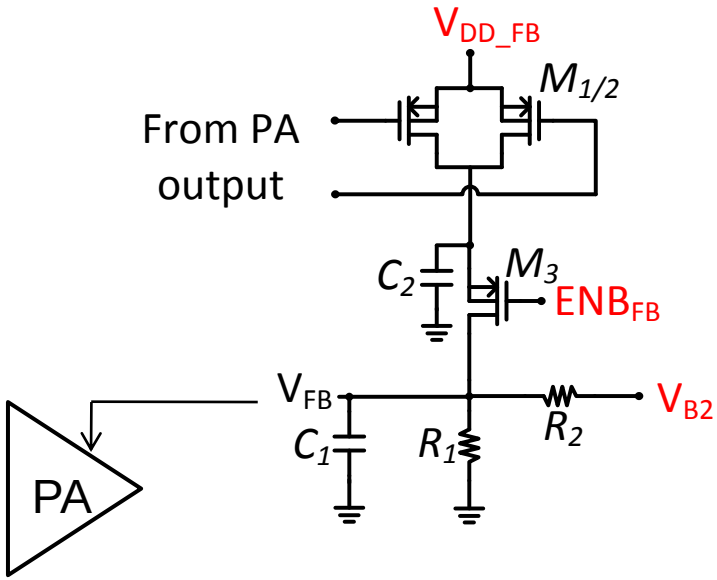

PA 4-Chip Variation Measurements

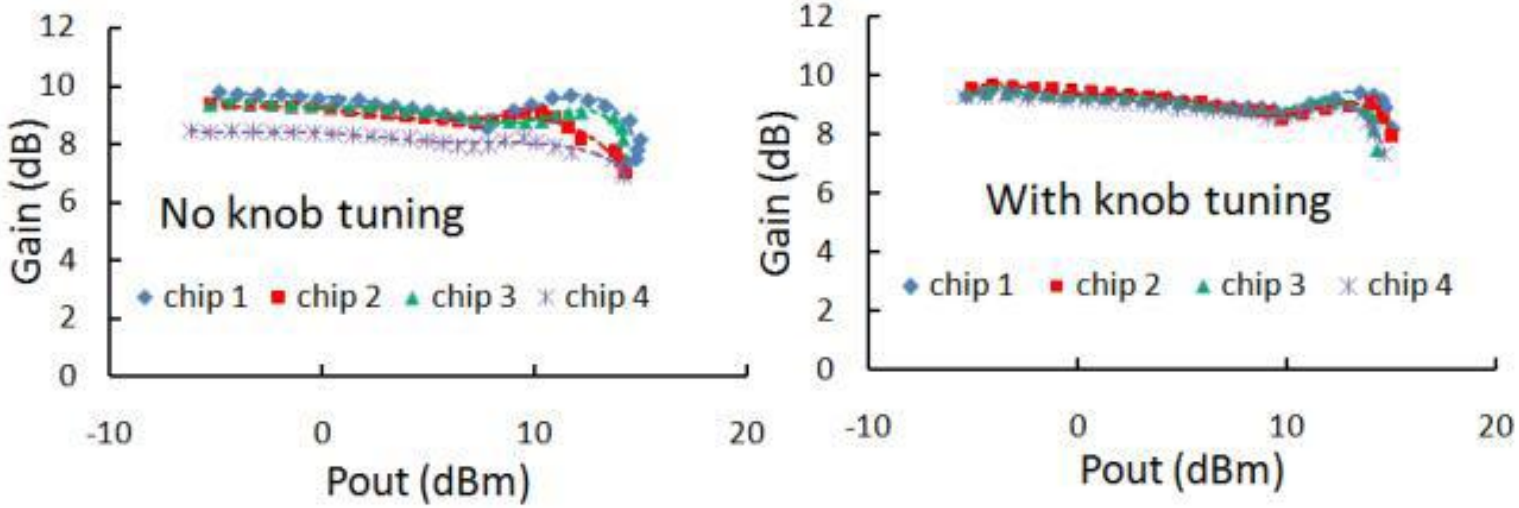

- Demonstrate global self-healing concept
- Tuning order $V_{B2} \rightarrow V_{DD_FB} \rightarrow ENB_{FB}$
- Gain variation of 4 chips: reduced from 22% to 2%

PA Performance Comparison

	This work	[1] ISSCC 09	[2] RFIC 09	[3] RFIC 10	[4] ※ ISSCC 10	[5] RFIC 10
Technology (nm)	65	65	90	65	65	65
V_{DD} (V)	1	1	1	1.2	1.2	1
Gain (dB)	9.4	15.8	10	13.7	14.3	30
P_{sat} (dBm)	14.9	11.5	12.6	14.2	16.6	10.6
P_{1dB} (dBm)	13.7	2.5	8.8	12.2	11	6.8
Peak PAE (%)	16.2	11	6.9	8.4	4.9	18
Area (mm^2)	0.04	0.05	0.64 *	1.2 *	0.46 *	0.05
PAE @ P_{1dB} (%)	13.5	5	4	n/a	3	7.7
Phase compensation	Yes	No	No	No	No	No
P_{sat}-P_{1dB}	1.2	9	3.8	2	5.6	3.8

* Including pads

※ power combining

Conclusion

- Demonstrated a 60 GHz CMOS power amplifier with an output power of 14.85 dBm, P_{1dB} of 13.7 dBm and PAE of 16% with a compact area of 0.042 mm^2
- Introduced on-chip amplitude and phase compensations to improve AM-AM and AM-PM
- Paved the way for an integrated self-healing transmitter

References

1. W. L. Chan, J. R. Long, M. Spirito, and J. J. Pekarik, “A 60GHz-band 1V 11.5dBm power amplifier with 11% PAE in 65nm CMOS,” *IEEE Int. Solid-State Circuits Dig.*, Feb. 2009, pp. 380 – 381.
2. N. Kurita and H. Kondoh, “60GHz and 80GHz wide band power amplifier MMICs in 90nm CMOS technology, ” *IEEE Radio Frequency Integrated Circuits Symp.*, Jun. 2009, pp. 39 – 42.
3. T. Quemerais, L. Moquillon, V. Huard, J. –M. Fournier, P. Benech, N. Corrao, ”DC hot carrier stress effect on CMOS 65nm 60 GHz power amplifiers,” *IEEE Radio Frequency Integrated Circuits Symp.*, Jun. 2010, pp. 351 – 354.
4. B. Martineau, V. Lnopik, A. Siligaris, F. Gianesello, and D. Belot, “A 53-to-68GHz 18dBm power amplifier with an 8-Way combiner in standard 65nm CMOS,” *IEEE Int. Solid-State Circuits Dig.*, Feb. 2010, pp. 428 – 429.
5. M. Boers, “A 60GHz transformer coupled amplifier in 65nm digital CMOS,” *IEEE Radio Frequency Integrated Circuits Symp.*, Jun. 2010, pp. 343 – 346.

Thank you for your time!